NEW

MULTITASKS

SFL

Stone crusher, mulcher and forestry tiller for tractors from 130 hp.

Multitask head for 130 to 220 hp tractors. The SFL can shred wood, shrubs, roots up to 6 inches in diameter, and stumps up to 10 inches in diameter. It can also crush stones up to 4 inches in diameter, operating at depths down to 8 inches. Top features include the adjustable counter blade, the anti-wear Hardox plates, the hydraulic hood, and the hydraulic support roller (optional). The SFL is available in two widths: SFL-200 and SFL-225, both with dual gear transmission. The head mounts a rotor with K/3 tools.

130-220 hp

Ø 4 in max (stones)
Ø 6 in max (trees)
Ø 10 in max (stump)

Depth 8 in

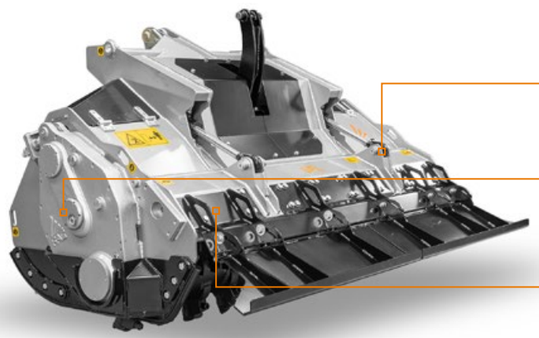

Hydraulically adjustable rear hood

Transmission with side gearbox
maximize the power delivered to the rotor

Interchangeable bolt-on counter blades
for fine mulching and easy maintenance

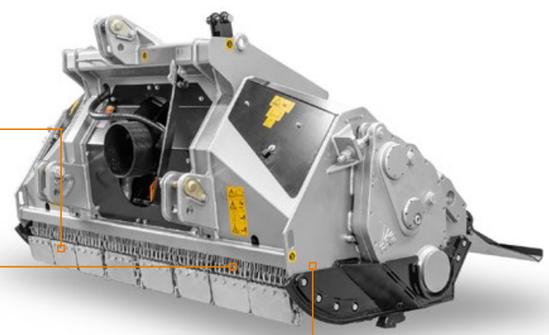

Bolt-on interchangeable protection chains

Adjustable Hardox® counter blade
to effectively control the final product size

Interchangeable wear-resistant Hardox® plates
for use in extreme conditions and
for easier maintenance

STANDARD EQUIPMENT

Hydraulically adjustable rear hood	Central PTO shaft with cam clutch
Interchangeable wear-resistant Hardox® plates	Interchangeable forged steel rotor shafts
Wear-resistant side plates	Interchangeable bolt-on counter blades
Bolt-on interchangeable protection chains	Adjustable Hardox® counter blade
Transmission with side gearbox	Skids to go underground
Freewheel gearbox	PTO shaft support for machine at rest
Side PTO shafts with friction clutches	Rotor with teeth K/3

OPTIONS

Hood grille	Z style self-aligning system
Plates for bolt-on protection chains	W style self-aligning system
Central PTO shaft yoke	Dozing blades
Hydraulic top link cylinder	Hydraulic support roller
IVT - CVT or creeper transmission mandatory	Forestry tires and carrier belly pan strongly recommended

MODEL	SFL-220	SFL-225
Engine (hp)	130-220	130-220
PTO (rpm)	1000	1000
Working width (in)	82	91
Total width (in)	95	104
Weight (lbs)	5401	5732
Rotor diameter (in)	22	22
Max shredding diameter stones (in)	4	4
trees (in)	6	6
stump (in)	10	10
Max working depth (in)	8	8
No. teeth type K/3+C/3/SS+BAZ	52+6+4	58+6+4

Data refers to machine as standard set-up. Options may have reflects on weights and dimensions. The technical data in this catalogue may be altered without prior notice.

MAIN OPTIONS

Hood grille

Hydraulic support roller

Z style self-aligning system

W style self-aligning system

TOOTH K/3
(standard)

TOOTH C/3/SS
(side scraper)

TOOTH BAZ
(side scraper)